Creform Joint Legend

HJ-1	HJ-2
HJ-3	HJ-4
HJ-6	HJ-6A
HJ-7	HJ-12

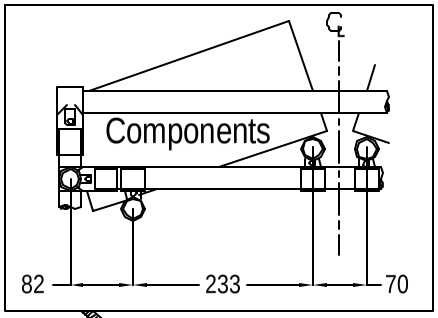

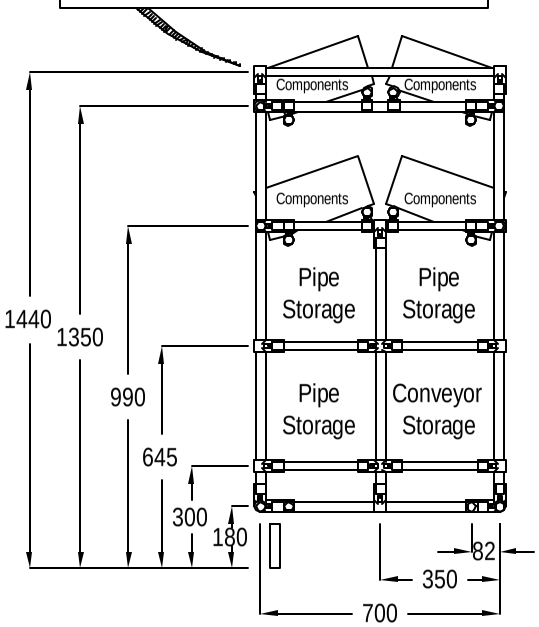

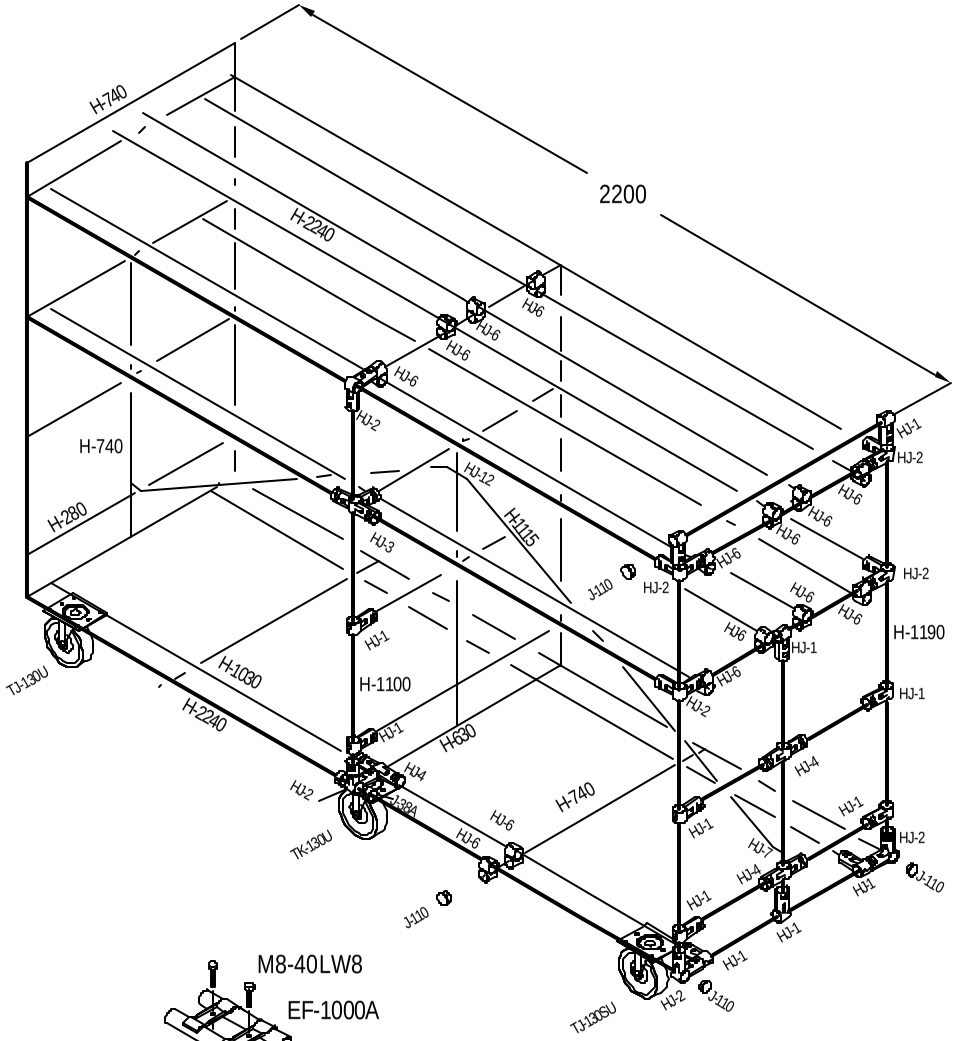

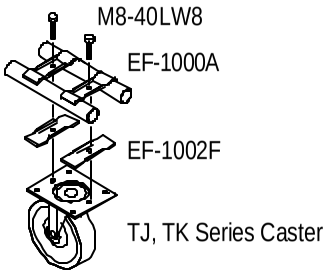

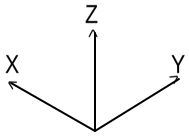

MATERIAL LIST		
	PART NO.	QTY.
	PIPES/CUTS	15/56
X:	H-2240	10
	H-2130	2
	H-1030	8
Y:	H-740	4
	H-630	9
	H-280	12
Z:	H-1190	4
	H-1100	2
	H-740	3
BRACE:	H-1115	2
	JOINTS	
	HJ-1	26
	HJ-2	16
	HJ-3	2
	HJ-4	8
	HJ-6	32
	HJ-7	2
	HJ-12	1
	J-38A	4
	J-110	28
	CASTERS	
	TJ-130U	2
	TJ-130SU	2
	TK-130U	2
	EF-1000A	12
	EF-1002F	12
	M8-40LW8	12

CREFORM
MATERIAL HANDLING SYSTEM
P.O. Box 830 Greer, SC 29652-0830
1628 Poplar Dr. Ext. Greer, SC 29651-6519
Phone: (864) 877-7405 Fax: (864) 877-3863
Email: creform@textube.com

APPROVED BY	CHECKED BY	DESIGNED BY	PIPE COLOR	CONTACT	CUSTOMER
		RG		LOCATION	TITLE Pipe/Component Cart
*ALL DIMENSIONS ARE IN MILLIMETERS, MEASURED CENTER-TO-CENTER. 1" = 25.4 mm			TEXTUBE® CORPORATION WWW.TEXTUBE.COM		DRAWING NO. A010709-1J